Woosh GSM

CD Kit Fitting Guide

Important: For your own safety you must read this manual before attempting to fit any part of the motor kit to your bike. You must also ensure that you fit the kit in strict accordance with the instructions in this manual.

Sales: 01702 435566 — Support: 01702 684444 — E-mail: support@wooshbikes.co.uk

Before you start the installation of your kit, please read the following:

This kit is intended to be fitted by someone who is competent and experienced at fitting electric kits to bikes. If you are not experienced and/or lack the necessary tools to complete any of the procedures in this manual, you should seek the advice of a professional who can fit the kit for you. If necessary, call us on 01702 684444 or email us at support@wooshbikes.co.uk and we will try and put you in touch with someone in your area that has the necessary expertise to properly fit your kit. You will of course need to pay for the technician to install your kit, these costs are not covered by Woosh Bikes.

Warranty Terms:

If your kit is fitted by a professional installer, it will be covered by our standard one year warranty, which means that in the event of a failure, you would first need to have the person that installed your kit confirm the issue and likely cause, then you (or the installer) would need to contact us and provide us with the details of the fault. If the issue cannot be resolved over the phone or via email, then you would need to return the faulty part to us at your expense. We will then repair or replace the faulty part and send it back to you at our expense. If the kit was not fitted by a professional and/or the failure that has occurred is due to a poor or incorrect installation of the kit, the warranty will be void.

What's in the Box

Ensure that you have all the parts shown below before going any further, if there are any missing parts, contact us on 01702 435566.

This kit comprises of mid-drive motor/chain-ring, display meter/control panel, modular wiring harness, speed sensor/cable, magnet for speed sensor, right-side twist-grip (and matching left grip), brake levers, cranks, bracket parts/fixing kit and battery cable.

Installing the Motor

You first need to remove your existing bottom bracket, slide the motor in from the right side of the bike and then fit the remaining parts as per the diagram below.

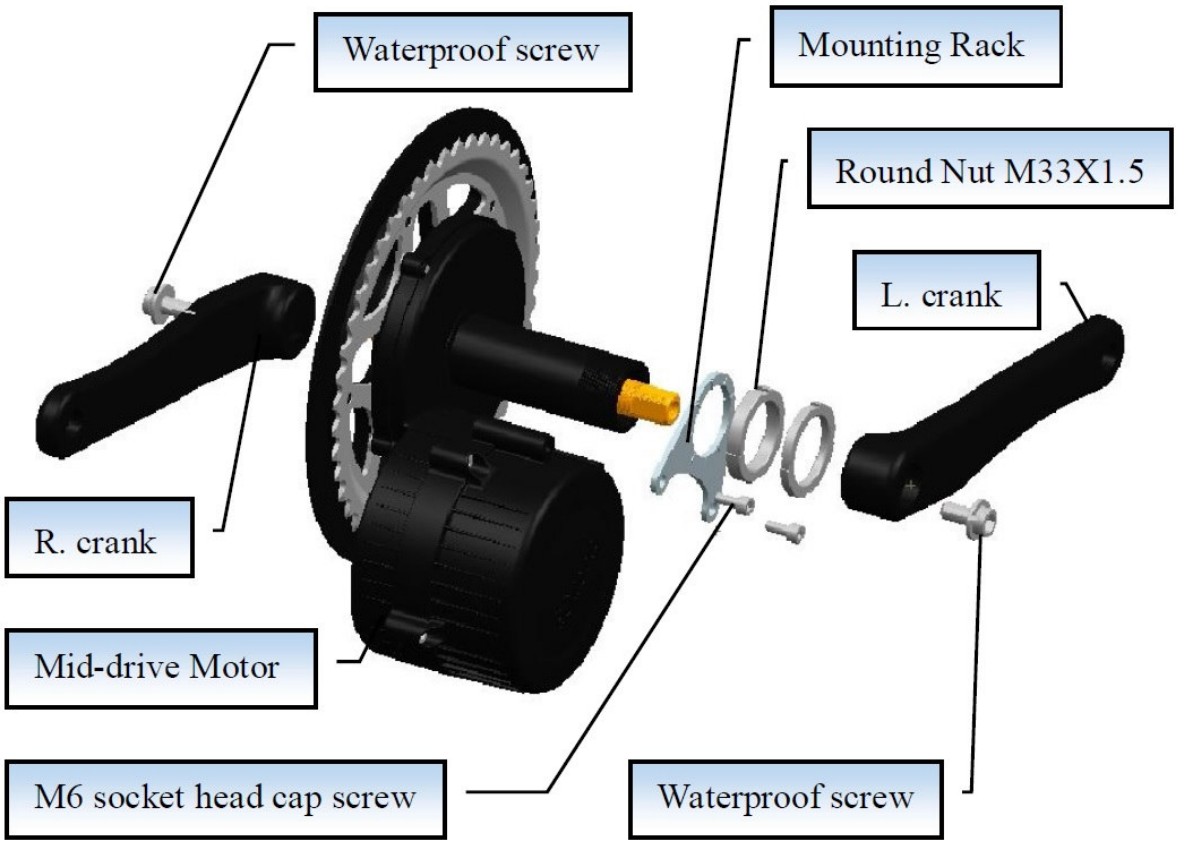

Before you proceed to secure the motor in place, ensure that at least 10mm of the thread protrudes on the left side.

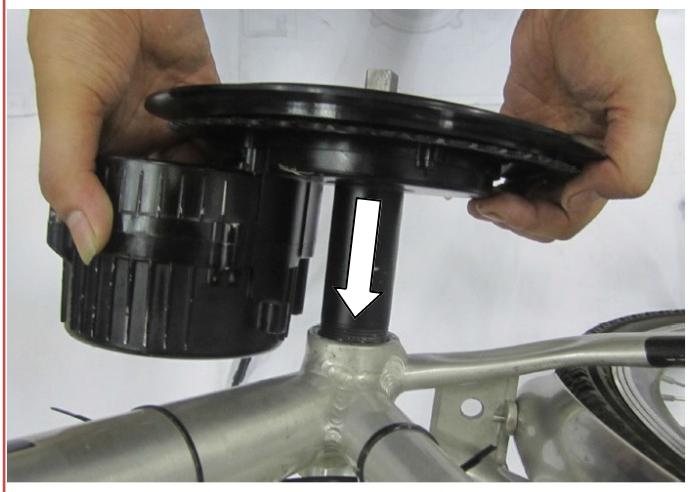

Installing the Motor cont.

Align the bracket as shown and fit the two 12mm M6 bolts in place as shown below.

Fit the M33 nut in place and tighten to a torque of 55-60Nm

Fit the second nut and tighten this to the same torque.

You should now fit the cranks.

Handlebar Components:

The brake levers, throttle and display module need to be mounted to the handlebars. The installation procedure for these parts may vary a little from bike to bike, but follow the guide below for a general overview.

The LCD module and key-pad would normally be fitted to the left side of the handlebars just to the right of the grip. Simply undo the two screws and remove the underside of the clamp, clip the LCD over the handlebars at the desired position, the re-fit the clamp/screws to secure it in place. It's a similar process to secure the key-pad but there's just a single screw.

To fit the brake levers and thumb-throttle, you will need to slide the grip s off the bars, loosen any of your existing components such as the shifter and move them towards the centre a little, then slide the throttle on and then tighten to secure it in the desired position.

The next step is to run the modular cable (for the display, twist-grip and brake cut-outs) from the front of the bike back to the motor.

Handlebar Components cont.

You must ensure that there is enough play in the cables so that they do not get stretched or pulled when the handlebars are rotated.

The connectors for the throttle, brake cut-outs and LCD are colour coded and should be mated with the matching colours on the modular cabling. The brake cut-outs mate with the red connectors, the twist-grips mates with the yellow connector, and the lead from the display (which has a green connector) mates with the black connector . Ensure that the arrows on the connectors line up before pushing them firmly together—see below-right.

Be careful when connecting the cables and don't force them or you may bend/damage the pins.

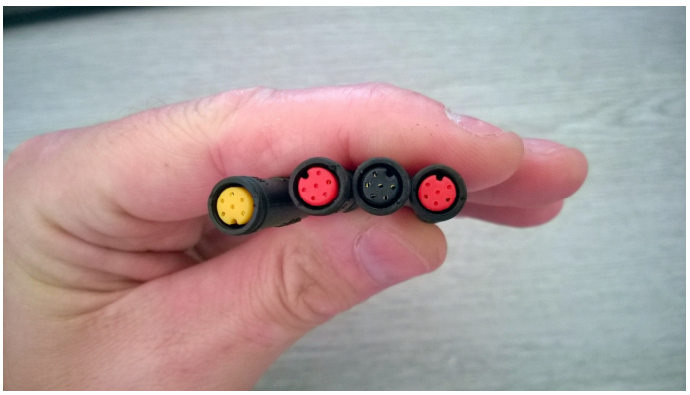

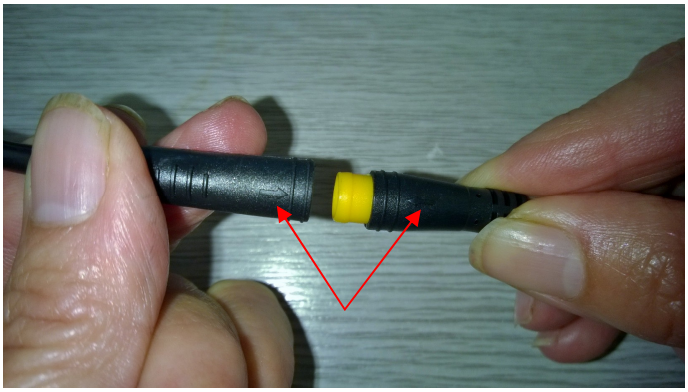

Fitting the Speed Sensor:

The speed sensor consists of two parts, the sensor itself and a magnet which is attached to one of the rear spokes. The speed sensor is mounted approximately half-way along the inside of the chain stay as shown in the diagram below (in Red). Simply secure the sensor to the frame with cable-ties, it may be necessary to fit a rubber spacer between the sensor and the frame to bring the sensor closer to the magnet, otherwise it may not detect the magnet as it passes. Attach the magnet to a spoke in such a position so that as the wheel rotates, the magnet passes the rear-most part of the sensor as shown below-right.

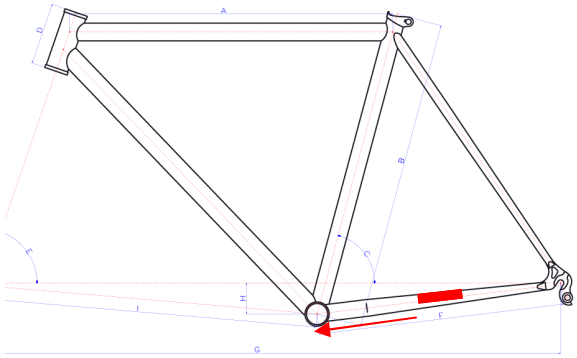

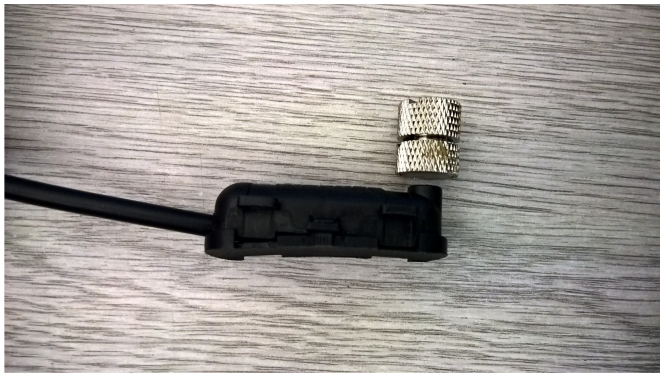

Run the cable along the chain stay as indicated in RED above, securing it with cable-ties and ensuring that the cable is clear of the tyre, and attach it to the matching connector coming from the motor.

Battery care:

This is still relevant even if you sourced your battery elsewhere.

Some care is needed to ensure your battery performs at its best and lasts as long as possible. All batteries age over time and become less effective, so to ensure you get the most from your battery, follow the instructions below.

Charge the battery once or twice per week as needed, it is better to keep the battery topped up than to allow it to run completely flat.

Do NOT charge the battery in extremely cold conditions. The battery can be easily removed from the bike and charged indoors. Remember to allow the battery to warm up to room temperature before charging.

If the battery is not in regular use i.e. over the winter, you should charge the battery for around 15 minutes every three—four weeks. This will slow the aging process and will help the battery to last as long as possible. When the bike is to be put back into service, fully charge the battery.

General battery care:

Do not attempt to open the outer casing of the battery.

Do not attempt to repair the battery.

Do not immerse the battery in water.

Keep the battery away from children.

Do not drop, pierce or otherwise damage the battery.

Ensure the battery is not exposed to temperatures above 55 degrees Celsius or extreme humidity.

Do not use the bike in an environment where temperatures are below -5 or greater than 55 degrees Celsius.

Woosh Support:

Be sure to check the FAQ section on our website before calling as the answers to the most common queries are there and you may find that the solution to your problem is already online. If you *do* need to get in touch, our contact details are below.

It can sometimes be useful to *see* the issue you have, so if possible, email a couple of photos illustrating the problem and we'll normally get back to you within a an hour or two (on weekdays).

Support staff are not available at the weekends, though if you send an email, it will normally be read on the following Monday morning.

Support articles and FAQ's: www.wooshbikes.co.uk/?support

Email: kits@wooshbikes.co.uk

Telephone: 01702 684444 (If there is no answer, leave a brief message and contact no. and someone will call you back).

Support staff are available 10am to 5pm Monday to Friday.